J G Coates (Burnley) Ltd, Trafalgar Street,
Burnley, Lancashire, BB11 1TH
01282 424376
sales@cotel.co.uk

40mm Dia Swivel Foot M8 x 70mm
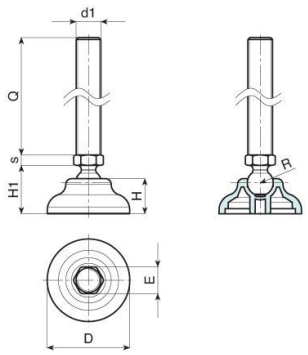
Part Number	4950/40/112
D	40
H	17
d1	M8
Q	70
Material	Reinforced Polyamide
Insert Material	Steel ZP
H1	23.5
R	12.5
E	13
s	5
Max Static Load Newton	10000
Colour	Black